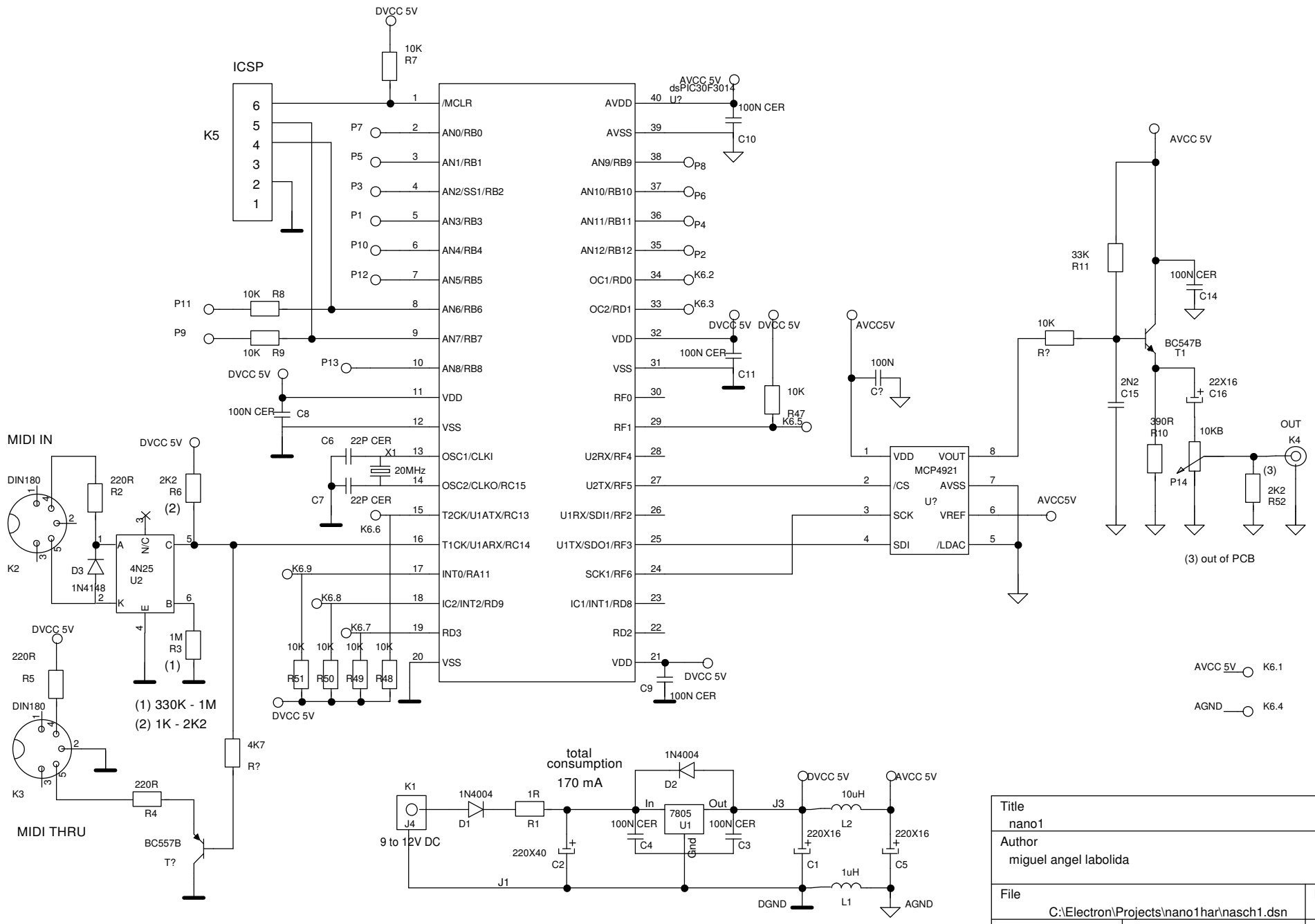

Title nano1		
Author miguel angel labolida		
File C:\Electron\Projects\nano1har\nasch1.dsn		Document
Revision 1.09	Date 2007-12-26	Sheets 1 of 2